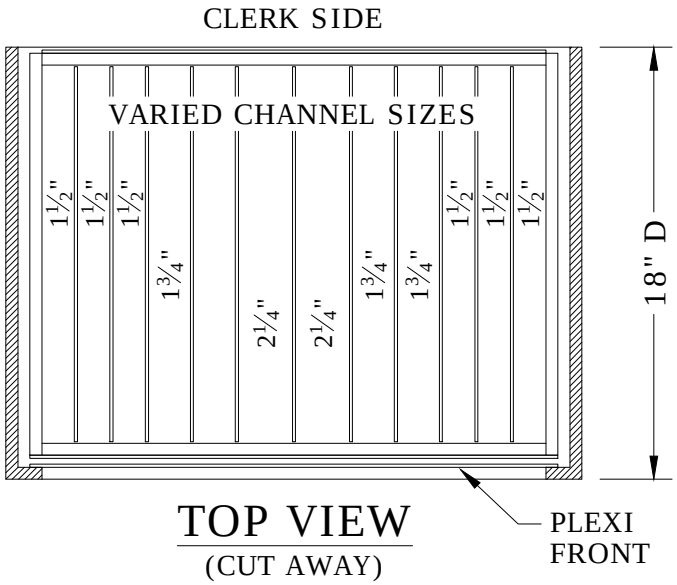

TOP VIEW
(CUT AWAY)

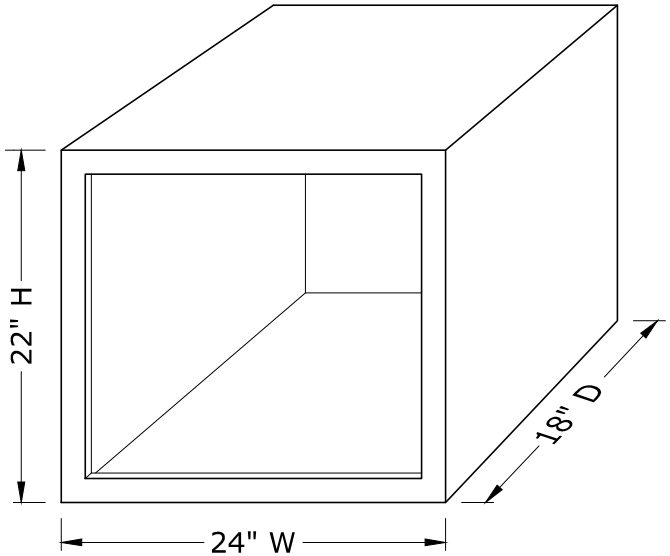

OVERALL DIMENSIONS

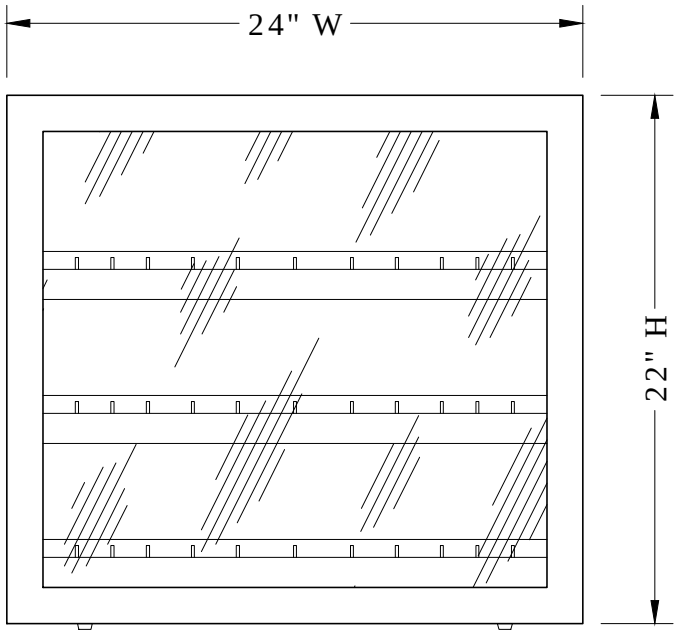

FRONT VIEW
(CUSTOMER SIDE)

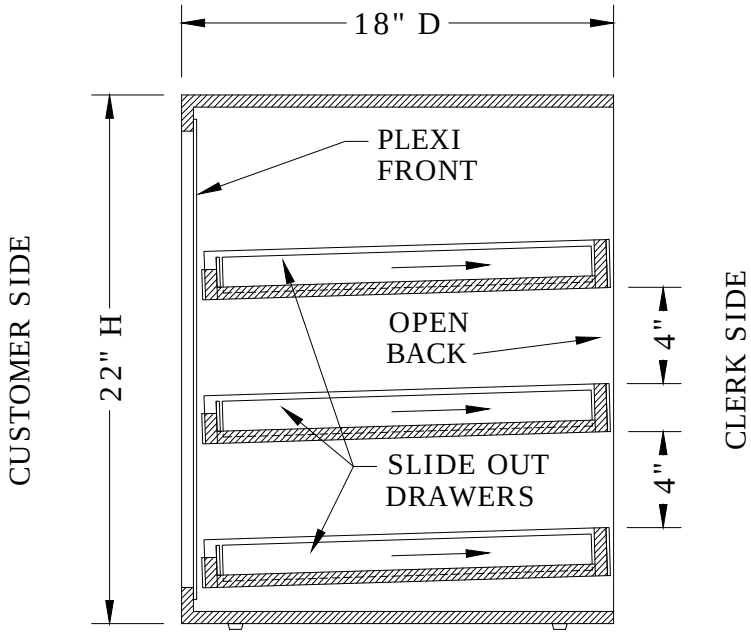

SIDE VIEW
(CUT AWAY)